Monkeytoe

PRODUCT SPECIFICATION SHEET

Contemporary Balustrade

PRODUCT DESCRIPTION

Attractive, lightweight and compliant balustrade suitable for any fire egress or back of house stairwells including multi- story buildings.

TYPICAL USES / APPLICATIONS

- Fire egress
- House stairwells (including multi-story buildings)
- General safety egress

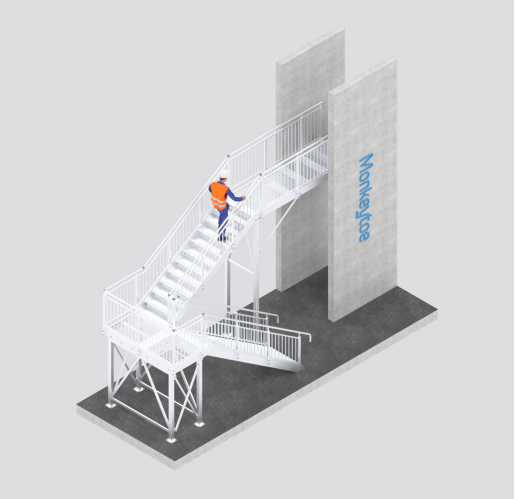

CHARACTERISTICS / ADVANTAGES

- Designed and tested to 60kg horizontal loading
- Prefabricated modular componentry ensures fast on-site assembly - no welding required
- Lightweight, high-tensile aluminium components
- Unique swivelling saddle design
- Low maintenance and neat appearance
- Suits many varied applications and locations
- New Zealand manufactured
- Configurations can be varied to suit a range of applications.
- Powdercoated in standard Dulux colours or to specifier's requirements.

TESTS

APPROVALS / STANDARDS

- All handrails are designed and installed in accordance with NZS/AS1675-1992
- F4 Safety From Falling
- D1 Accessible Routes Code

WARRANTY

Lifetime warranty (10 years)

TECHNICAL DATA / MATERIALS

- Handrail extrusion: 48.8mm High strength T6 Aluminium tube
- Balustrade: 17mm square tube spaced at 100mm centres.
- Stanchions: 50mm square post with 22mm diameter spigot under the handrail.
- Balustrade reefs: Varies according to specification.
- Elbows and end caps: Die cast aluminium.
- Fixings: Stainless Steel 304 Grade screw bolted or chemset.

INSTALLATION

Installation works must be carried out only by Monkeytoe or instructed/approved contractors

MAINTENANCE

- It is recommended that handrails are included in the standard 'building warrant of fitness' inspections
- All damaged or loose fixings to be reported immediately to asset manager or building owner for correction

Contemporary Balustrade

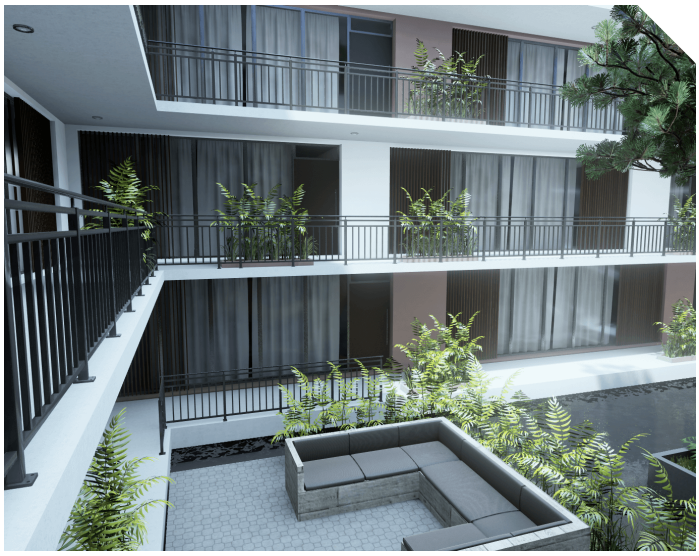

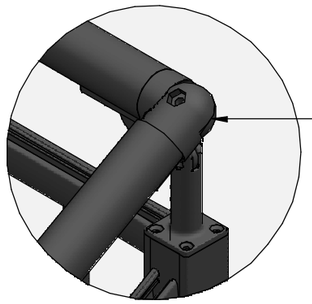

DETAIL 1
1:5

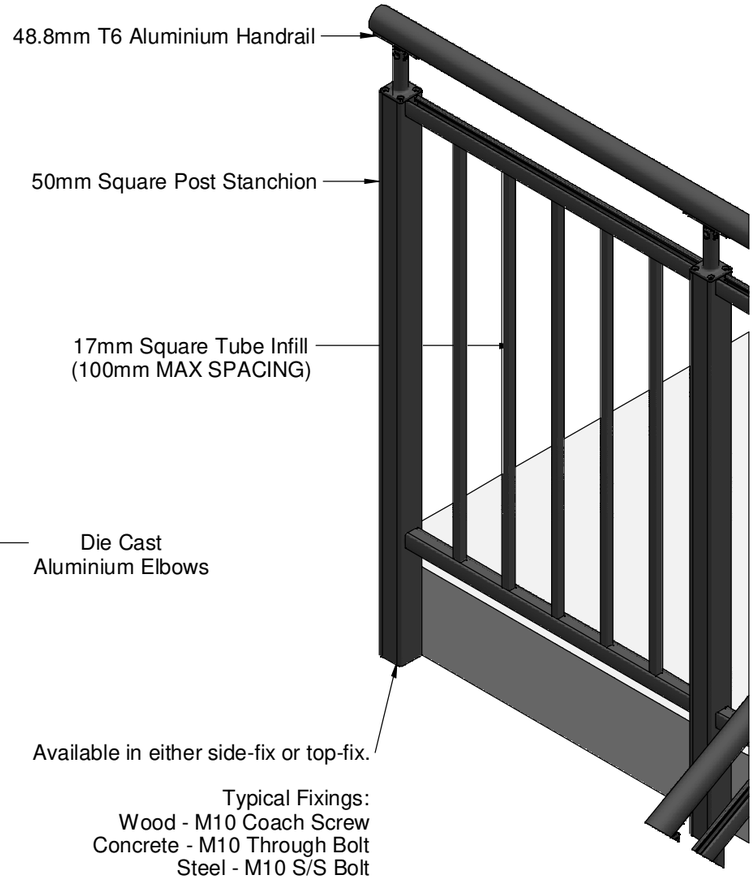

DETAIL 3
1:10

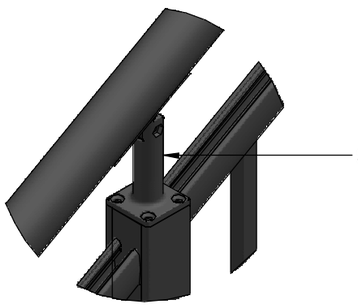

DETAIL 2
1:5

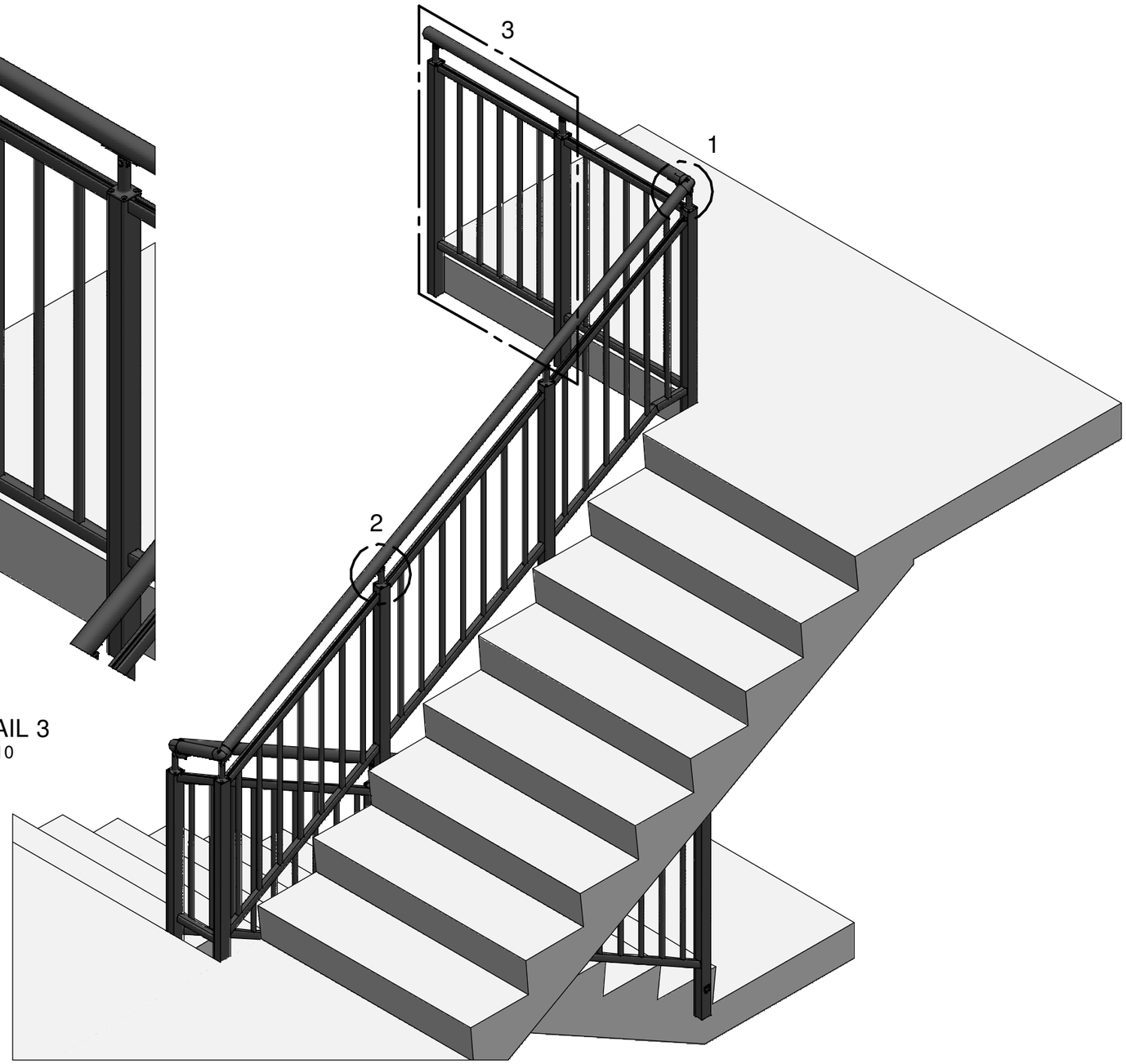

Side Fix Balustrade
1:20

This drawing and associated design is the copyright and property of Monkeytoe Ltd. It shall not be used for any purpose or project, without prior written consent other that designated by Monkeytoe Ltd.©

DESIGNED IN ACCORDANCE WITH

- NZS/AS1675-1992
- Building Codes D1 and F4

DRAWN BY:	**KM**
MODELED BY:	**KM**
CHECKED BY:	**BP/BD/LK**
DATE DRAWN:	**7/12/2018**
LAST SAVED:	**7/12/2018**
MATERIAL:	**SEE B.O.M.**
FINISH:	**Mill**
TOLERANCES:	**+0,-2.0;0.1°**

Monkeytoe
EVERYTHING BETTER
0800 658 637 - www.monkeytoe.co.nz

Contemporary Balustrade		
MonkeyToe Group Ltd		
DWG No: 2005-CON-1		**2005**
	SHEET 1 OF 1	A3
	SCALE: 1:20	REV:01
DO NOT SCALE	DIMENSIONS IN MILLIMETERS	